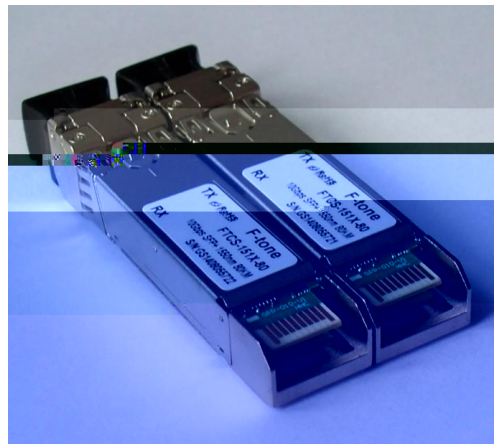

- Optical interface compliant to IEEE 802.3ae 10GBASE-SR
- Electrical interface compliant to SFF-8431
- Hot Pluggable
- Supports rate up to 10.3 Gb/s bit rates
- 1G/2G/4G/ 8G/10G Fiber Channel applications.
- 850nm VCSEL transmitter, PIN photo-detector
- Maximum link length of 300m on 2000MHz/km MMF
- Low power consumption
- All-metal housing for superior EMI performance
- Advanced firmware allow customer system encryption information to be stored in transceiver
- Cost effective SFP+ solution, enables higher port densities and greater bandwidth
- For the OBSAI application, the rates are 6.144Gb/s, 3.072 Gb/s, 1.536 Gb/s and 0.768 Gb/s.
- For the CPRI application, the rates are 6.144Gb/s, 3.072 Gb/s, 2.4576 Gb/s, 1.2288 Gb/s, 0.6144 Gb/s.
- RoHS6 compliant (lead free)
- Operating case temperature:

  Standard : 0 to +70°C

  Industrial : -40 to +85°C

- 10GBASE-SR at 10.3125Gbps
- 10GBASE-SW at 9.953Gbps
- Other optical links
- For the OBSAI application, the rates are 6.144Gb/s, 3.072 Gb/s, 1.536 Gb/s and 0.768 Gb/s.
- For the CPRI application, the rates are 6.144Gb/s, 3.072 Gb/s, 2.4576 Gb/s, 1.2288 Gb/s, 0.6144 Gb/s.

This 850 nm VCSEL 10Gigabit SFP+ transceiver is designed to transmit and receive optical data over 50/125 µm or 62.5/125 µm multimode optical fiber (Table 1).

Fiber type	Minimum modal bandwidth @ 850 nm (MHz•km)	Operating range (meters)
62.5 µm MMF	160	2 to 26
	200	2 to 33
[illegible]	400	2 to 66
	500	2 to 82
	2000	2 to 300

The SFP+ SR module electrical interface is compliant to SFI electrical specifications. The transmitter input and receiver output impedance is 100 Ohms differential. Data lines are internally AC coupled. The module provides differential termination and reduce differential to common mode conversion for quality signal termination and low EMI. SFI typically operates over 200 mm of improved FR4 material or up to about 150mmof standard FR4 with one connector.

The transmitter converts 10Gbit/s serial PECL or CML electrical data into serial optical data compliant with the 10GBASE-SR standard. An open collector compatible Transmit Disable (Tx_Dis) is provided. A logic “1,” or no connection on this pin will disable the laser from transmitting. A logic “0” on this pin provides normal operation. The transmitter has an internal automatic power control loop (APC) to ensure constant optical power output across supply voltage and temperature variations. An open collector compatible Transmit Fault (TFault) is provided. TX_Fault is a module output contact that when high, indicates that the module transmitter has detected a fault condition related to laser operation or safety. The TX_Fault output contact is an open drain/collector and shall be pulled up to the Vcc_Host in the host with a resistor in the range 4.7-10 kΩ. TX_Disable is a module input contact. When TX_Disable is asserted high or left open, the SFP+ module transmitter output shall be turned off. This contact shall be pulled up to VccT with a 4.7 kΩ to 10 kΩ resistor

The receiver converts 10Gbit/s serial optical data into serial PECL/CML electrical data. An open collector compatible Loss of Signal is provided. Rx_LOS when high indicates an optical signal level below that specified in the relevant standard. The Rx_LOS contact is an open drain/collector output and shall be pulled up to Vcc_Host in the host with a resistor in the range 4.7-10 kΩ, or with an active termination. Power supply filtering is recommended for both the transmitter and receiver. The Rx_LOS signal is intended as a preliminary indication to the system in which the SFP+ is installed that the received signal strength is below the specified range. Such an indication typically points to non-installed cables, broken cables, or a disabled, failing or a powered off transmitter at the far end of the cable.

These values represent the damage threshold of the module. Stress in excess of any of the individual Absolute Maximum Ratings can cause immediate catastrophic damage to the module even if all other parameters are within Recommended Operating Conditions.

Power Supply Voltage	V_{CC}	0	+3.6	V
Storage Temperature	Tc	-40	+85	°C
Operating Case Temperature	Tc	0	+70	°C
Relative Humidity	RH	5	95	%
RX Input Average Power	Pmax	-	0	dBm

Recommended Operating Environment specifies parameters for which the electrical and optical characteristics hold unless otherwise noted.

Power Supply Voltage	V_{CC}	3.135	3.300	3.465	V
Operating Case Temperature	T_C	0	25	70	°C

Power Consumption				1	W
TX_Fault,RX_LOS	VOL	0		0.4	V
	VOH	Host_Vcc-0.5		Host_Vcc+0.3	V
TX_DIS	VIL	-0.3		0.8	V
	VIH	2.0		VCCT+0.3	V
RS0,RS1	VIL	-0.3		0.8	V
	VIH	2.0		VCCT+0.3	V

The following optical characteristics are defined over the Recommended Operating Environment unless otherwise specified.

Center Wavelength	λt	840	850	860	nm	
RMS spectral width	Pm	-	-	Note 1	nm	
Average Optical Power	Pavg	-6.5	-	-1	dBm	2
Extinction Ratio	ER	3.5	-	-	dB	3
Transmitter Dispersion Penalty	TDP	-	-	3.9	dB	
Relative Intensity Noise	Rin	-	-	-128	dB/Hz	12dB reflection
Optical Return Loss Tolerance		-	-	12	dB	
Center Wavelength	λr	840	850	860	nm	
Receiver Sensitivity	Psens	-	-	-11.1	dBm	4
Stressed Sensitivity in OMA		-	-	-7.5	dBm	4
Los function	Los	-30	-	-12	dBm	
Overload	Pin	-	-	-1.0	dBm	4
Receiver Reflectance		-	-	-12	dB	

1. Trade-offs are available between spectral width, center wavelength and minimum OMA, as shown in table 6.
2. The optical power is launched into MMF
3. Measured with a PRBS 2^{31}-1 test pattern @10.3125Gbps
4.Measured with a PRBS 2^{31}-1 test pattern @10.3125Gbps,BE

Center Wavelength (nm)	RMS Spectral width (nm)								
	Up to 0.05	0.05to 0.1	0.1 to 0.15	0.15 to 0.2	0.2 to 0.25	0.25 to 0.3	0.3 to 0.35	0.35 to 0.4	0.4 to 0.45
840 to 842	-4.2	-4.2	-4.1	-4.1	-3.9	-3.8	-3.5	-3.2	-2.8
842 to 844	-4.2	-4.2	-4.2	-4.1	-3.9	-3.8	-3.6	-3.3	-2.9
844 to 846	-4.2	-4.2	-4.2	-4.1	-4.0	-3.8	-3.6	-3.3	-2.9
846 to 848	-4.3	-4.2	-4.2	-4.1	-4.0	-3.8	-3.6	-3.3	-2.9
848 to 850	-4.3	-4.2	-4.2	-4.1	-4.0	-3.8	-3.6	-3.3	-3.0
850 to 852	-4.3	-4.2	-4.2	-4.1	-4.0	-3.8	-3.6	-3.4	-3.0
852 to 854	-4.3	-4.2	-4.2	-4.1	-4.0	-3.9	-3.7	-3.4	-3.1
854 to 856	-4.3	-4.3	-4.2	-4.1	-4.0	-3.9	-3.7	-3.4	-3.1
856 to 858	-4.3	-4.3	-4.2	-4.1	-4.0	-3.9	-3.7	-3.5	-3.1
858 to 860	-4.3	-4.3	-4.2	-4.2	-4.1	-3.9	-3.7	-3.5	-3.2

The following electrical characteristics are defined over the recommended Operating Environment unless otherwise specified.

Data Rate		-	10.3125	-	Gbps	
Power Consumption		-	600	1000	mW	
Single Ended Output Voltage Tolerance		-0.3	-	4.0	V	
C common mode voltage tolerance		15	-	-	mV	
Tx Input Diff Voltage	VI	180		700	mV	
Tx Fault	VoL	-0.3		0.4	V	At 0.7mA
Data Dependent Input Jitter	DDJ			0.10	UI	
Data Input Total Jitter	TJ			0.28	UI	
Single Ended Output Voltage Tolerance		-0.3	-	4.0	V	
Rx Output Diff Voltage	Vo	300				

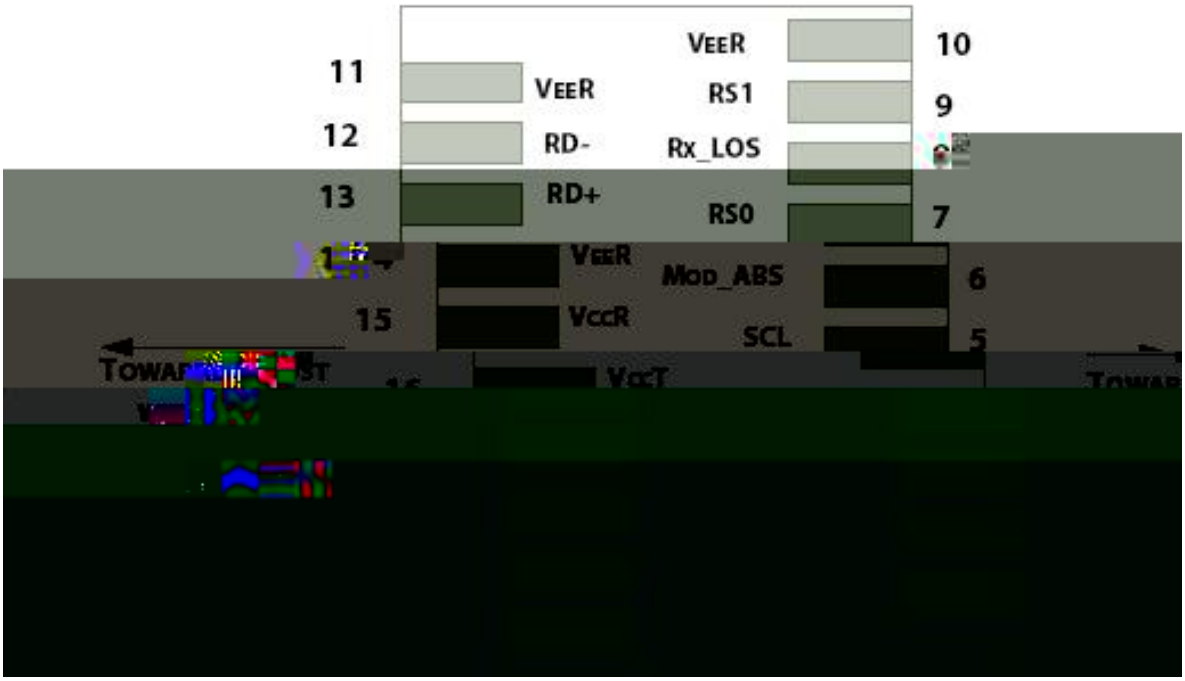
11
12
13
15
VEER
RD-
RD+
VEER
VCCR
VCCT
VEER
RS1
Rx_LOS
RS0
MOD_ABS
SCL
10
9
7
6
5

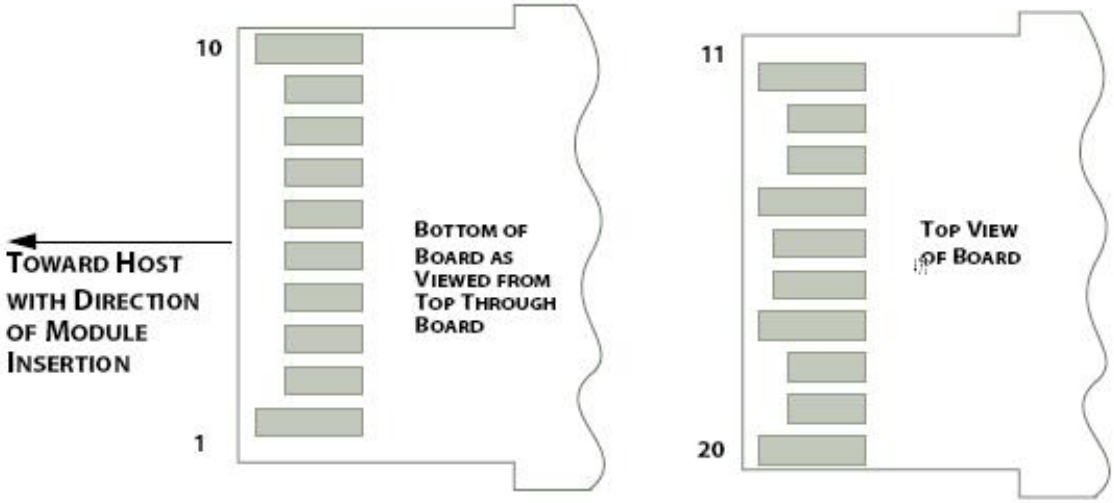
10
1
TOWARD HOST WITH DIRECTION OF MODULE INSERTION
BOTTOM OF BOARD AS VIEWED FROM TOP THROUGH BOARD
11
20
TOP VIEW OF BOARD

1	VEET [1]	Transmitter Ground
2	Tx_FAULT [2]	Transmitter Fault
3	Tx_DIS [3]	Transmitter Disable. Laser output disabled on high or open
4	SDA [2]	2-wire Serial Interface Data Line
5	SCL [2]	2-wire Serial Interface Clock Line
6	MOD_ABS [4]	Module Absent. Grounded within the module
7	RS0 [5]	Rate Select 0
8	RX_LOS [2]	Loss of Signal indication. Logic 0 indicates normal operation
9	RS1 [5]	Rate Select 1
10	VEER [1]	Receiver Ground
11	VEER [1]	Receiver Ground
12	RD-	Receiver Inverted DATA out. AC Coupled
13	RD+	Receiver DATA out. AC Coupled
14	VEER [1]	Receiver Ground
15	VCCR	Receiver Power Supply
16	VCCT	Transmitter Power Supply
17	VEET [1]	Transmitter Ground
18	TD+	Transmitter DATA in. AC Coupled
19	TD-	Transmitter Inverted DATA in. AC Coupled
20	VEET [1]	Transmitter Ground

[1] Module circuit ground is isolated from module chassis ground within the module.
[2].should be pulled up with 4.7k – 10k ohms on host board to a voltage between 3.15Vand 3.6V.
[3]Tx_Disable is an input contact with a 4.7 kΩ to 10 kΩ pullup to VccT inside the module.
[4]Mod_ABS is connected to VeeT or VeeR in the SFP+ module. The host may pull this contact up to Vcc_Host with a resistor in the range 4.7 kΩ to10 kΩ.Mod_ABS is asserted “High” when the SFP+ module is physically absent from a host slot.
[5] RS0 and RS1 are module inputs and are pulled low to VeeT with > 30 kΩ resistors in the module.

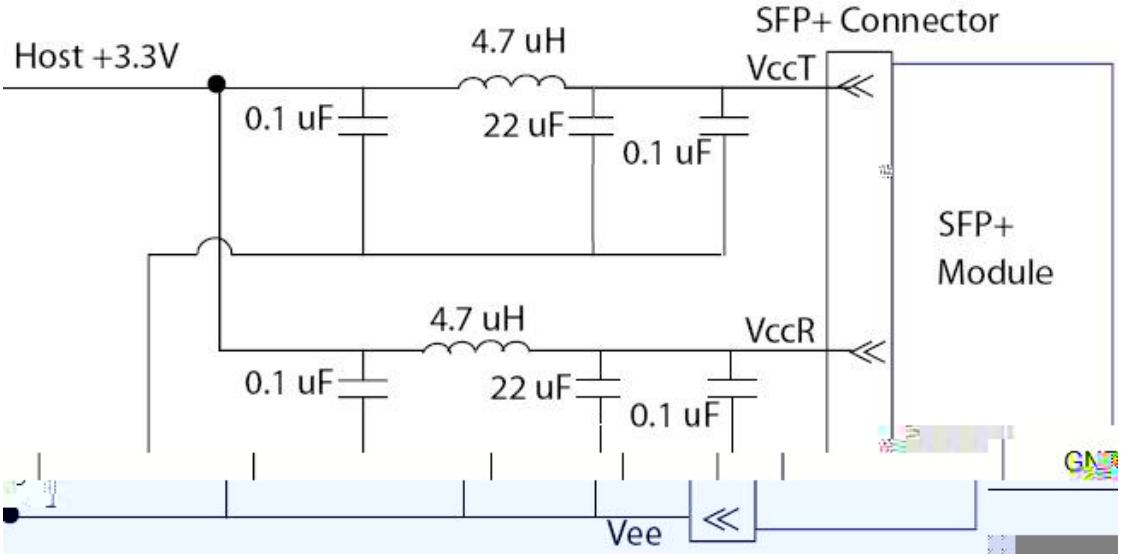
Host +3.3V
4.7 uH
SFP+ Connector
VccT
0.1 uF
22 uF
0.1 uF
SFP+
Module
4.7 uH
VccR
0.1 uF
22 uF
0.1 uF
Vee

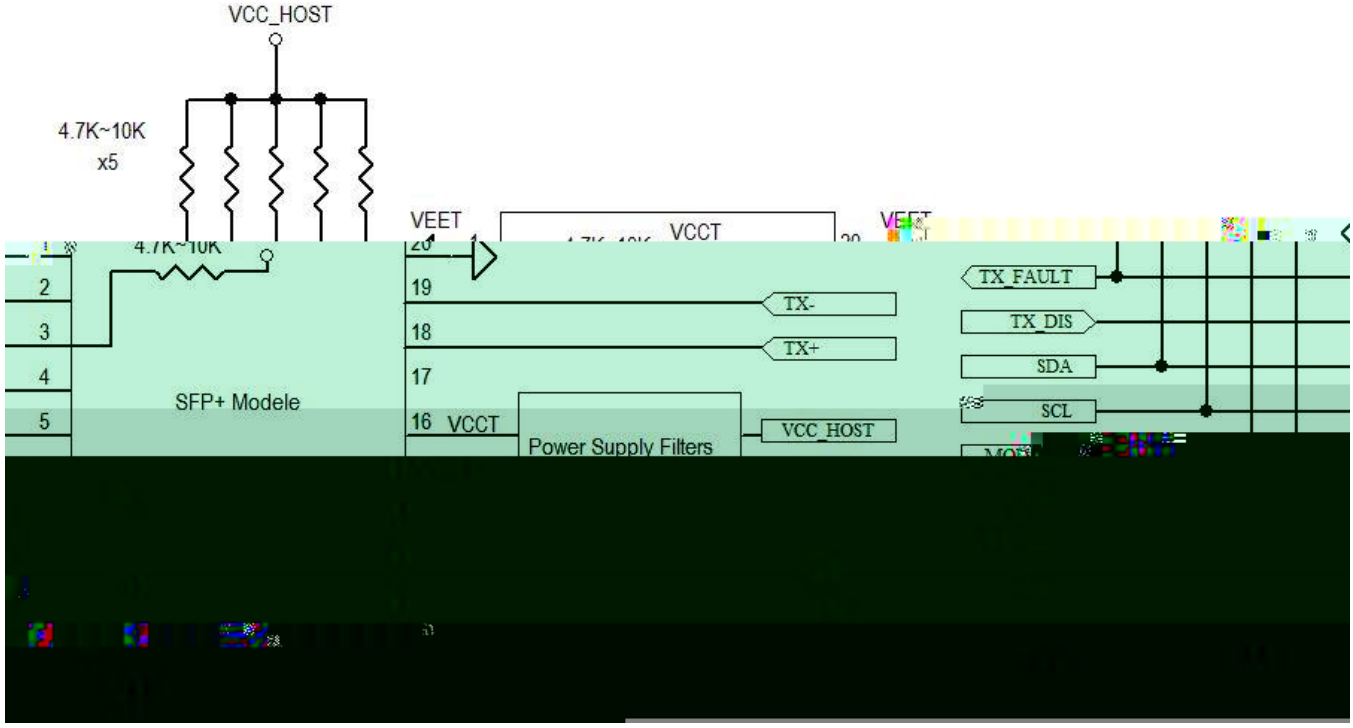
VCC_HOST
4.7K~10K
x5
VEET
VCCT
2
3
4
5
SFP+ Modele
19
18
17
16
VCCT
TX-
TX+
Power Supply Filters
VCC_HOST
TX_FAULT
TX_DIS
SDA
SCL

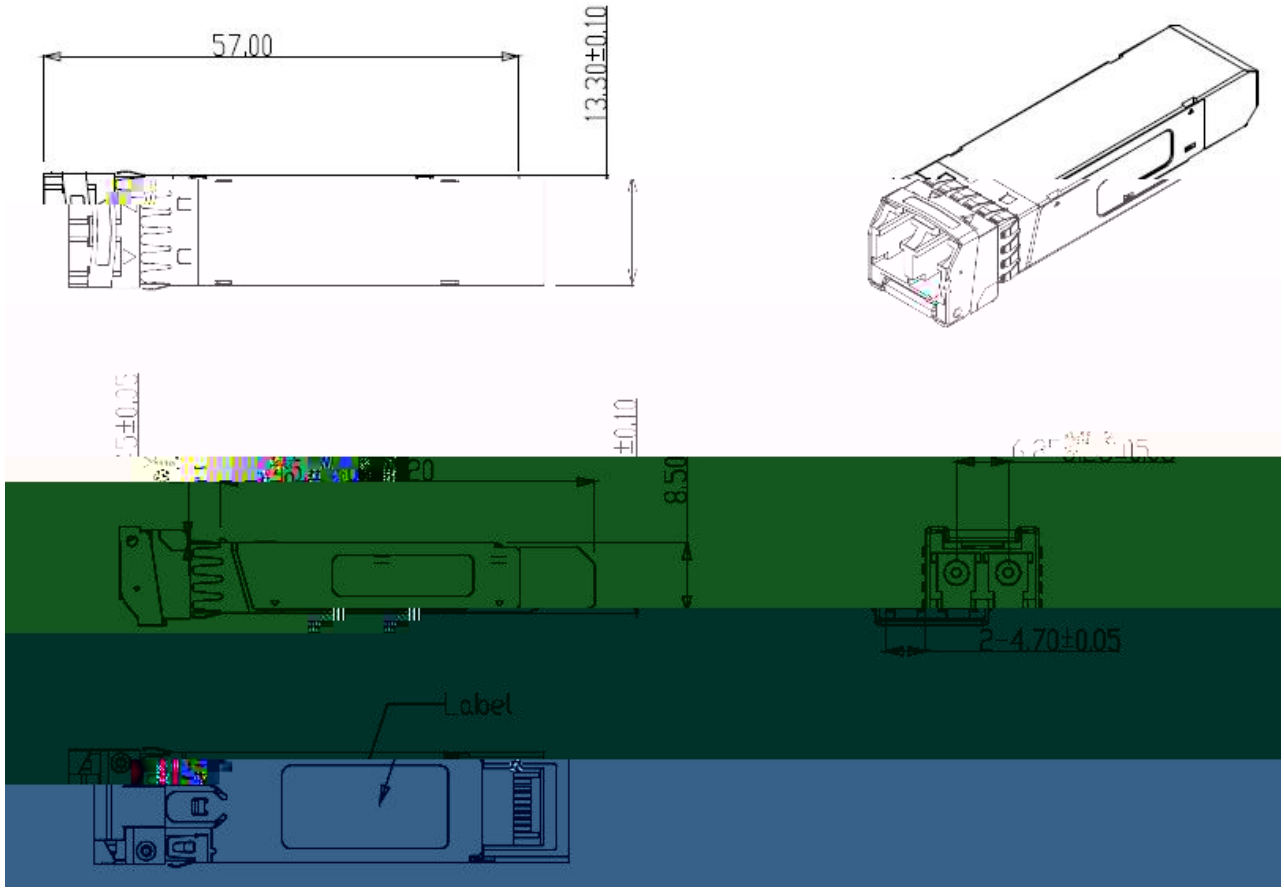

F-tone Networks SFP+ transceiver is designed to be Class I Laser safety compliant and is certified per the following standards:

Laser Safety	FDA	CDRH 21 CFR 1040 annd Laser Notice No. 50
Product Safety	UL	UL and CUL EN60950-2:2007
Environmental protection	SGS	RoHS Directive 2002/95/EC
EMC	WALTEK	EN 55022:2006+A1:2007 EN 55024:1998+A1+A2:2003